Instruction Manual

COMMERCIAL ELECTRIC WATER HEATERS

500 Tennessee Waltz Parkway
Ashland City, TN 37015

Low Lead Content

MODELS
PCE-6/10/17/20 10MSA Series 102
PCE-30/40/50 2OLSA Series 110
& PCE-30/40/52/66/82/120 2ORTA Series 110

INSTALLATION - OPERATION - SERVICE - MAINTENANCE - LIMITED WARRANTY

Thank you for buying this energy efficient water heater. We appreciate your confidence in our products.

⚠ WARNING

Read and understand this instruction manual and the safety messages herein before installing, operating, or servicing this water heater.

Failure to follow these instructions and safety messages could result in death or serious injury.

This manual must remain with the water heater.

⚠ WARNING

If the water heater becomes immersed in water up to or above the level of the bottom of the element doors, the heater should be examined by a qualified service agency before it is placed in operation, see Page 2.

PLACE THESE INSTRUCTIONS ADJACENT TO HEATER AND NOTIFY OWNER TO KEEP FOR FUTURE REFERENCE.

PRINTED 1213

195202-005

SAFE INSTALLATION, USE, AND SERVICE

The proper installation, use and servicing of this water heater is extremely important to your safety and the safety of others.

Many safety-related messages and instructions have been provided in this manual and on your own water heater to warn you and others of a potential injury hazard. Read and obey all safety messages and instructions throughout this manual. It is very important that the meaning of each safety message is understood by you and others who install, use, or service this water heater.

⚠	**This is the safety alert symbol. It is used to alert you to potential personal injury hazards. Obey all safety messages that follow this symbol to avoid possible injury or death.**

⚠ DANGER	**DANGER indicates an imminently hazardous situation which, if not avoided, will result in death or injury.**
⚠ WARNING	**WARNING indicates a potentially hazardous situation which, if not avoided, could result in death or injury.**
⚠ CAUTION	**CAUTION indicates a potentially hazardous situation which, if not avoided, could result in minor or moderate injury.**
CAUTION	**CAUTION used without the safety alert symbol indicates a potentially hazardous situation which, if not avoided, could result in property damage.**

All safety messages will generally tell you about the type of hazard, what can happen if you do not follow the safety message, and how to avoid the risk of injury.

The California Safe Drinking Water and Toxic Enforcement Act requires the Governor of California to publish a list of substances known to the State of California to cause cancer, birth defects, or other reproductive harm, and requires businesses to warn of potential exposure to such substances.

This product contains a chemical known to the State of California to cause cancer, birth defects, or other reproductive harm. This water heater can cause low level exposure to some of the substances listed in the Act.

IMPORTANT DEFINITIONS

- **Qualified Installer or Service Agency:**

  Installation and service of this water heater requires ability equivalent to that of a Qualified Agency (as defined by ANSI below) in the field involved. Installation skills such as plumbing, electrical supply are required in addition to electrical testing skills when performing service.

- **ANSI Z223.1 2006 Sec. 3.3.83:**

  "Qualified Agency" - "Any individual, firm, corporation or company that either in person or through a representative is engaged in and is responsible for (a) the installation, testing or replacement of gas piping or (b) the connection, installation, testing, repair or servicing of appliances and equipment; that is experienced in such work; that is familiar with all precautions required; and that has complied with all the requirements of the authority having jurisdiction."

GENERAL SAFETY INFORMATION

PRECAUTIONS

DO NOT USE THIS WATER HEATER IF ANY PART HAS BEEN UNDER WATER. Immediately call a qualified service technician to inspect the water heater and to replace any part of the control system which has been under water.

If the unit is exposed to the following, do not operate heater until all corrective steps have been made by a qualified service agency.

1. External fire.
2. Damage.
3. Firing without water.

GROUNDING INSTRUCTIONS

This water heater must be grounded in accordance with the National Electrical Code and/or local codes. These must be followed in all cases.

This water heater must be connected to a grounded metal, permanent wiring system; or an equipment grounding conductor must be run with the circuit conductors and connected to the equipment grounding terminal or lead on the water heater.

HYDROGEN GAS (FLAMMABLE)

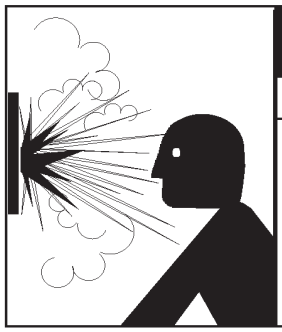

⚠ WARNING

Explosion Hazard

- Flammable hydrogen gases may be present.
- Keep all ignition sources away from faucet when turning on hot water.

Hydrogen gas can be produced in a hot water system served by this heater that has not been used for a long period of time (generally two weeks or more). Hydrogen gas is extremely flammable. To reduce the risk of injury under these conditions, it is recommended that the hot water faucet be opened for several minutes at the kitchen sink before using any electrical appliance connected to the hot water system. If hydrogen is present there will probably be an unusual sound such as air escaping through the pipe as the water begins to flow. THERE SHOULD BE NO SMOKING OR OPEN FLAME NEAR THE FAUCET AT THE TIME IT IS OPEN.

When servicing this unit, verify the power to the unit is turned off prior to opening the control cabinet door.

⚠ WARNING

Read and understand this instruction manual and the safety messages herein before installing, operating, or servicing this water heater.

Failure to follow these instructions and safety messages could result in death or serious injury.

This manual must remain with the water heater.

⚠ WARNING

- **Before removing any access panels or servicing the water heater, make sure the electrical supply to the water heater is turned "OFF."**
- **Failure to do this could result in death, serious bodily injury, or property damage.**

CAUTION

Improper Installation, use and service may result in property damage.

- Do not operate water heater if flood damaged.
- Inspect anode rods regularly, replace when significantly depleted.
- Install in location with drainage.
- Fill tank with water before operation.
- Properly sized thermal expansion tanks are required on all closed water systems.

Refer to this manual for installation and service.

⚠ DANGER

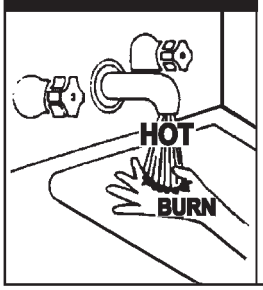

Water temperature over 125°F (52°C) can cause severe burns resulting in severe injury or death.

Children, the elderly, and the physically or mentally disabled are at highest risk for scald injury.

Feel water before bathing or showering.

Temperature limiting valves are available.

Read instruction manual for safe temperature setting.

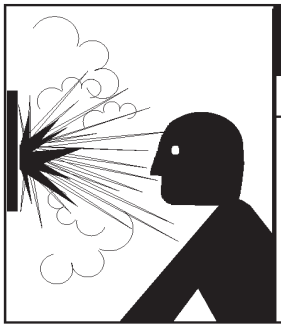

⚠ WARNING

Explosion Hazard

- Flammable hydrogen gases may be present.
- Keep all ignition sources away from faucet when turning on hot water.

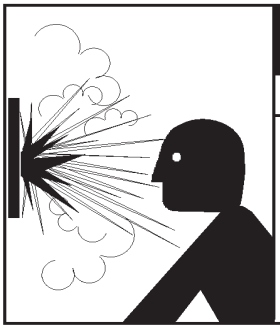

⚠ WARNING

Explosion Hazard

- Overheated water can cause water tank explosion.
- Properly sized temperature and pressure relief valve must be installed in opening provided.

TABLE OF CONTENTS

SAFE INSTALLATION, USE, AND SERVICE 2
GENERAL SAFETY INFORMATION 3
Precautions 3
Hydrogen Gas (Flammable) 3
INTRODUCTION 4
Preparing for the Installation 4
DIMENSIONS AND CAPACITIES DATA 5
APPROVALS 6
MODEL AND RATING 6
FEATURES AND COMPONENTS 7
LOCATING THE NEW WATER HEATER 8
Facts to Consider About the Location 8
Clearances 8
INSTALLATION 9
Required Ability 9
General 9
Contaminated Water 9
Circulating Pump 9
Insulation Blankets 9
Temperature-Pressure Relief Valve 9
Closed Water Systems 10
Thermal Expansion 10
ELECTRICAL 11
General 11
Branch Circuit 11
Calculating Amperage/Overcurrent Protection 11
WIRING DIAGRAMS 12
OPERATION 13
General 13
Filling the Water Heater 13
Initial Start Up 13
Draining the Water Heater 13
TEMPERATURE REGULATION 14
Temperature Adjustment 14
MAINTENANCE 15
General 15
Anode Rod Inspection 15
TROUBLESHOOTING CHECKLIST 16
Checklist 16
Leakage Checkpoints 17
NOTES 18
Repair Parts List 20

INTRODUCTION

Thank You for purchasing this water heater. Properly installed and maintained, it should give you years of trouble free service.

Abbreviations Found In This Instruction Manual:

- ANSI - American National Standards Institute
- AHRI - Air-Conditioning, Heating and Refrigeration Institute
- NEC - National Electrical Code
- NFPA - National Fire Protection Association
- UL - Underwriters Laboratory

PREPARING FOR THE INSTALLATION

⚠ WARNING

- **Before removing any access panels or servicing the water heater, make sure the electrical supply to the water heater is turned "OFF."**
- **Failure to do this could result in death, serious bodily injury, or property damage.**

1. Read the "General Safety Information" section of this manual first and then the entire manual carefully. If you don't follow the safety rules, the water heater may not operate safely. It could cause DEATH, SERIOUS BODILY INJURY AND/OR PROPERTY DAMAGE.

   This manual contains instructions for the installation, operation, and maintenance of the electric water heater. It also contains warnings throughout the manual that you must read and be aware of. All warnings and all instructions are essential to the proper operation of the water heater and your safety. **READ THE ENTIRE MANUAL BEFORE ATTEMPTING TO INSTALL OR OPERATE THE WATER HEATER.**

   Be sure to turn off power when working on or near the electrical system of the heater. Never touch electrical components with wet hands or when standing in water. When replacing fuses always use the correct size for the circuit. see page 12.

   The model and rating plates on page 6 interprets certain markings into useful information. Both of these references should be used to identify the heater, its components and optional equipment.

2. The installation must conform with these instructions and the local code authority having jurisdiction and the requirements of the power company. In the absence of local codes, the installation must comply with the latest editions of the National Electrical Code, NFPA 70 or the Canadian Electrical Code CSA C22.1. The National Electrical Code may be ordered from: National Fire Protection Association, 1 Batterymarch Park, Quincy, MA 02269. The Canadian Electrical Code is available from the Canadian Standards Association, 8501 East Pleasant Valley Road, Cleveland, OH 44131.

3. If after reading this manual you have any questions or do not understand any portion of the instructions, call the toll free number listed on the back cover of this manual for technical assistance.

   A sample rating plate is shown on page 6 of this manual. In order to expedite your request, please have full model and serial number available for the technician.

4. Carefully plan your intended placement of the water heater. Examine the location to ensure the water heater complies with the "Locating the New Water Heater" section in this manual.

   Installation and service of this water heater requires ability equivalent to that of a licensed tradesman or qualified agency (page 2) in the field involved. Plumbing and electrical work are required.

DIMENSIONS AND CAPACITIES DATA

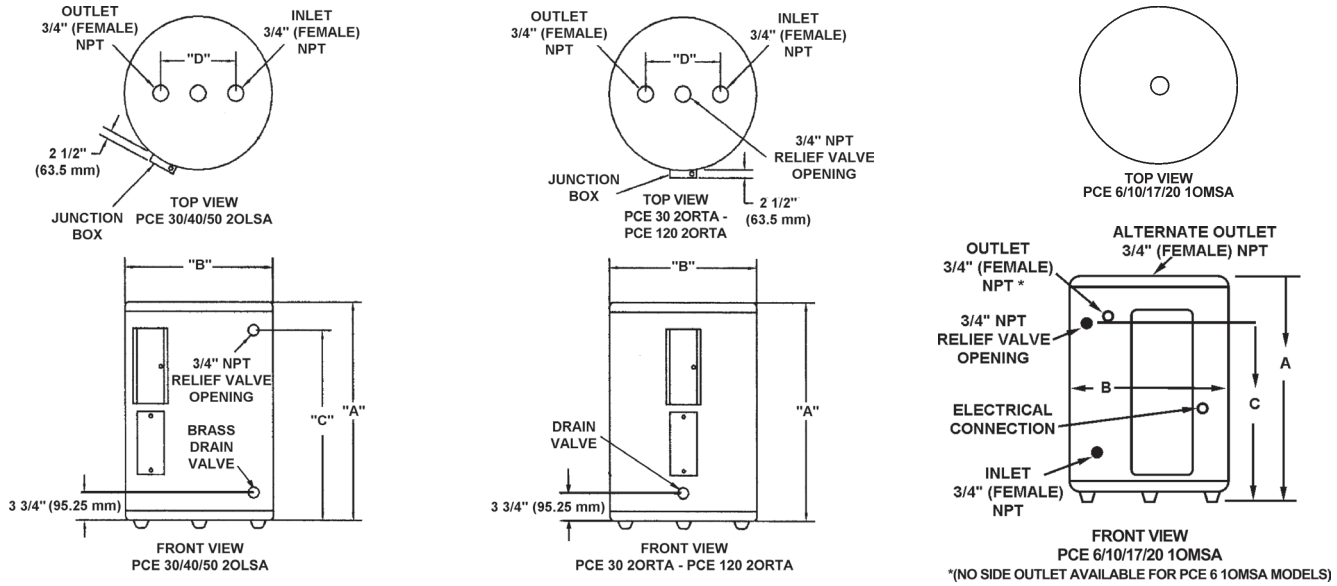

FIGURE 1

TABLE 1 - ROUGH-IN DIMENSIONS

Models Dimensions	No. of Elements	Tank Capacity		A		B		C		D		Approx. Shipping Weight	
		US Gals.	Litres	inches	mm	inches	mm	inches	mm	inches	mm	Lbs.	Kg.
PCE 6 1OMSA	1	6	23	15 1/2	394	14 1/4	362	11	279	-	-	35	15.9
PCE 10 1OMSA	1	10	38	18 1/4	464	18	457	12 1/2	318	-	-	54	24.5
PCE 17 1OMSA	1	15	57	26	660	18	457	20 1/2	521	-	-	58	26.3
PCE 20 1OMSA	1	20	76	22 1/4	565	21 3/4	552	15 3/8	391	-	-	73	33.1
PCE 30 2OLSA	2	30	114	30 7/8	784	21 3/4	552	24 1/8	613	8	203	100	45.4
PCE 40 2OLSA	2	40	151	32 1/4	819	24	610	25 9/16	649	8	203	125	56.7
PCE 50 2OLSA	2	50	189	32 1/4	819	26 1/2	673	25 1/8	638	8	203	166	75.3
PCE 30 2ORTA	2	30	114	34 1/2	876	20 1/2	521	-	-	8	203	98	44.5
PCE 40 2ORTA	2	40	151	45 1/8	1146	20 1/2	521	-	-	8	203	113	51.3
PCE 52 2ORTA	2	50	189	54 7/8	1394	20 1/2	521	-	-	8	203	131	59.4
PCE 60 2ORTA	2	66	250	60 3/4	1543	21 3/4	552	-	-	8	203	176	79.8
PCE 82 2ORTA	2	80	303	59 3/8	1508	24	610	-	-	8	203	211	95.7
PCE 120 2ORTA	2	119	450	62 7/16	1586	29 3/8	746	-	-	8	203	326	147.9

TABLE 2 - RECOVERY CAPACITIES

Element Wattage (Upper/Lower)	INPUT KW	U.S. Gallons/Hr and Litres/Hr at TEMPERATURE RISE INDICATED											
		F°	36F°	40F°	54F°	60F°	72F°	80F°	90F°	100F°	108F°	120F°	126F°
		C°	20C°	22.2C°	30C°	33.3C°	40C°	44.4C°	50C°	55.5C°	60C°	66.6C°	70C°
NON-SIMULTANEOUS													
/1500		GPH	17	15	11	10	8	8	7	6	6	5	5
	1.5	LPH	64	58	43	38	32	29	26	23	21	19	18
/2000		GPH	23	20	15	14	11	10	9	8	8	7	6
	2.0	LPH	85	77	57	51	43	38	34	31	28	26	24
/2500		GPH	28	25	19	17	14	13	11	10	9	8	8
	2.5	LPH	107	96	71	64	53	48	43	38	36	32	30
3000/3000		GPH	34	30	23	20	17	15	14	12	11	10	10
	3.0	LPH	128	115	85	77	64	58	51	46	43	38	37
4000/4000		GPH	45	41	30	27	23	20	18	16	15	14	13
	4.0	LPH	170	153	114	102	85	77	68	61	57	51	49
4500/4500		GPH	51	46	34	30	25	23	20	18	17	15	14
	4.5	LPH	192	173	128	115	96	86	77	69	64	58	55
5000/5000		GPH	56	51	38	34	28	25	23	20	19	17	16
	5.0	LPH	213	192	142	128	107	96	85	77	71	64	61
6000/6000		GPH	68	61	45	41	34	30	27	24	23	20	19
	6.0	LPH	256	230	170	153	128	115	102	92	85	77	73
SIMULTANEOUS OPERATION													
3000/3000		GPH	68	61	45	41	34	30	27	24	23	20	19
	6	LPH	256	230	170	153	128	115	102	92	85	77	73
4000/4000		GPH	90	81	60	54	45	41	36	32	30	27	26
	8	LPH	341	307	227	205	170	153	136	123	114	102	97
4500/4500		GPH	101	91	68	61	51	46	41	36	34	30	29
	9	LPH	384	345	256	230	192	173	153	138	128	115	110
5000/5000		GPH	113	101	75	68	56	51	45	41	38	34	32
	10	LPH	426	384	284	256	213	192	170	153	142	128	122
6000/6000		GPH	135	122	90	81	68	61	54	49	45	41	39
	12	LPH	511	460	341	307	256	230	205	184	170	153	146

Recovery capacities at 100° F rise equal: for non-simultaneous element operation = 4.1 gal. x KW of one element; for simultaneous element operation = 4.1 gal. x 2/3 KW of both elements. For other rises multiply element KW as previously explained by 410 and divide by temperature rise. Full load current for single phase = total watts : voltage.

APPROVALS

All models are listed by
Underwriters Laboratories Inc.

Low Lead Content

AHRI CERTIFIED®
www.ahridirectory.org

MODEL AND RATING

COMMERCIAL STORAGE TANK WATER HEATER

LLC

LISTED 22U1

MODEL NUMBER	SERIAL NUMBER	ITEM ID / PART NUMBER

VOLTS - AC	PHASE	WATTS UPPER	WATTS LOWER	CIRCUIT	CAPACITY US GAL.	MAX WORKING PRESSURE

TOTAL WATTS CONNECTED		
INTERLOCK 1 PH / 3PH	SIMULTANEOUS 1 PH	SIMULTANEOUS 3 PH

PCE 30/40/50 2OLSA & PCE 30/40/52/66/80/120 2ORTA

ELECTRIC STORAGE TANK WATER HEATER

LLC

LISTED 932N

MODEL NUMBER	SERIAL NUMBER	ITEM ID / PART NUMBER

VOLTS - AC	PHASE	WATTS UPPER	WATTS LOWER	TOTAL WATTS CONNECTED	CAPACITY US GAL.	MAX WORKING PRESSURE

ALTERNATE RATINGS				
VOLTS - AC	WATTS UPPER	WATTS LOWER	TOTAL WATTS CONNECTED	CIRCUIT

PCE 6/10/17/20 1OMSA

FEATURES AND COMPONENTS

This page shows typical water heater installations by model designations.

PCE DUAL ELEMENT HEATER

†FUSED ELECTRICAL SUPPLY SWITCH
ON 120 GALLON MODELS
REPLACE SHIPPING NIPPLE WITH PIPE PLUG
UNION
HOT WATER SUPPLY PIPE
HOT
COLD
UNION
COLD WATER INLET LINE
SHUTOFF VALVE
3/4" THREADED CONNECTION
*TEMPERATURE AND PRESSURE RELIEF VALVE
EMBLEM
ELECTRICAL JUNCTION BOX
DRAIN LINE
6" MAX. AIR GAP
FLOOR DRAIN
ACCESS PANELS
DRAIN VALVE

INSTALL SUITABLE DRAIN PANS UNDER WATER HEATERS TO PREVENT DAMAGE DUE TO LEAKAGE. REFER TO WATER HEATER LOCATION ON PAGE 8.

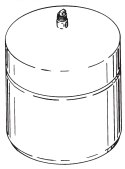

INSTALL THERMAL EXPANSION TANK IF CHECK VALVE OR PRESSURE REDUCING VALVE IS USED IN SUPPLY LINE.

INSTALL VACUUM RELIEF IN COLD WATER INLET LINE AS REQUIRED BY LOCAL CODES.

PCE SINGLE ELEMENT HEATER

HOT WATER SUPPLY PIPE
3/4" THREADED CONNECTION
UNION
COLD WATER INLET LINE
†FUSED ELECTRICAL SUPPLY SWITCH
SHUTOFF VALVE
ELECTRICAL JUNCTION BOX
*TEMPERATURE AND PRESSURE RELIEF VALVE
ACCESS PANEL
DRAIN LINE
DRAIN VALVE
6" MAX. AIR GAP
FLOOR DRAIN

HOT WATER SUPPLY PIPE
†FUSED ELECTRICAL SUPPLY SWITCH
UNION
COLD WATER INLET LINE
SHUTOFF VALVE
¾" THREADED CONNECTION
*TEMPERATURE AND PRESSURE RELIEF VALVE
UNION
DRAIN VALVE
DRAIN LINE
6" MAX. AIR GAP
FLOOR DRAIN

† OVER CURRENT PROTECTION MUST BE SUPPLIED IN WATER HEATER CIRCUIT. CONSULT LOCAL CODE OR NEC FOR PROPER INSTALLATION.

* INSTALL IN ACCORDANCE WITH ALL LOCAL CODES.

FIGURE 2

LOCATING THE NEW WATER HEATER

FACTS TO CONSIDER ABOUT THE LOCATION

CAUTION

Property Damage Hazard

- All water heaters eventually leak
- Do not install without adequate drainage.

The water heater should be located as close as possible to/or centralized to the water piping system. The water heater should be located in an area not subject to freezing temperatures.

The water heater should be located in an area where leakage of the tank or connections will not result in damage to the area adjacent to the heater or to lower floors of the structure.

When such locations cannot be avoided, a suitable drain pan should be installed under the heater.

Such pans should be at least two inches deep, have a minimum length and width of at least two inches greater than the diameter of the heater and should be piped to an adequate drain.

Drain pans suitable for these water heaters are available from your distributor or State Water Heaters, 500 Tennessee Waltz Parkway, Ashland City, TN 37015.

Water heater life depends upon water quality, water pressure and the environment in which the water heater is installed. Water heaters are sometimes installed in locations where leakage may result in property damage, even with the use of a drain pan piped to a drain. However, unanticipated damage can be reduced or prevented by a leak detector or water shut-off device used in conjunction with a piped drain pan. These devices are available from some plumbing supply wholesalers and retailers, and detect and react to leakage in various ways:

- Sensors mounted in the drain pan that trigger an alarm or turn off the incoming water to the water heater when leakage is detected.
- Sensors mounted in the drain pan that turn off the water supply to the entire home when water is detected in the drain pan.
- Water supply shut-off devices that activate based on the water pressure differential between the cold water and how water pipes connected to the water heater.
- Devices that will turn off the gas supply to a gas water heater while at the same time shutting off its water supply.

CLEARANCES

A minimum clearance of 4” must be allowed for access to replaceable parts such as thermostats, drain valve and relief valve.

Adequate clearance for servicing this water heater should be considered before installation, such as changing the anodes, etc.

⚠ FLOOD WARNING

IF THE HEATER BECOMES IMMERSED IN WATER UP TO OR ABOVE THE LEVEL OF THE BOTTOM OF THE ELEMENT DOORS, THE HEATER SHOULD BE EXAMINED BY A QUALIFIED SERVICE AGENT BEFORE IT IS PLACED IN OPERATION.

INSTALLATION

REQUIRED ABILITY

Installation and service of this water heater requires ability equivalent to that of a qualified installer or service agency (page 2) in the field involved. Plumbing and electrical work is required.

GENERAL

The installation must conform with these instructions and the local code authority having jurisdiction and the requirements of the power company. In the absence of local codes, the installation must comply with the latest editions of the National Electrical Code, NFPA 70 or the Canadian Electrical Code CSA C22.1. The National Electrical Code may be ordered from: National Fire Protection Association, 1 Batterymarch Park, Quincy, MA 02269. The Canadian Electrical Code is available from the Canadian Standards Association, 8501 East Pleasant Valley Road, Cleveland, OH 44131.

Do **NOT** test electrical system before heater is filled with water, follow the START UP procedure in the OPERATION section of this manual.

The principal components of the heater are identified in the Features and Components illustrations on page 7.

⚠ DANGER

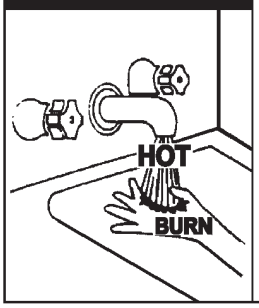

Water temperature over 125°F (52°C) can cause severe burns resulting in severe injury or death.

Children, the elderly, and the physically or mentally disabled are at highest risk for scald injury.

Feel water before bathing or showering.

Temperature limiting valves are available.

Read instruction manual for safe temperature setting.

MIXING VALVE USAGE:
Water heaters are intended to produce hot water. Water heated to a temperature which will satisfy space heating, clothes washing, dish washing, cleaning and other sanitizing needs can scald and permanently injure you upon contact. Some people are more likely to be permanently injured by hot water than others. These include the elderly, children, the infirm, or physically/developmentally disabled. If anyone using hot water in your home fits into one of these groups or if there is a local code or state law requiring a maximum water temperature at the hot water tap, then you must take special precautions. In addition to using the lowest possible temperature setting that satisfies your hot water needs, a means such as a **MIXING VALVE**, should be used at the hot water taps used by these people or at the water heater.

MIXING VALVES for reducing point of use temperature are available and are to be set at a maximum of 125 degree F. Consult a qualified installer or service agency. Follow all manufacturer's Instructions for installation of these valves. Before changing the factory setting on the thermostat, read the "Temperature Regulation" section in this manual.

⚠ WARNING

Toxic Chemical Hazard

- Do not connect to non-potable water system.

CONTAMINATED WATER

This water heater shall not be connected to any heating system(s) or component(s) used with a non-potable water heating appliance.

Toxic chemicals, such as those used for boiler treatment shall not be introduced into this system.

CIRCULATING PUMP

Field installed circulating pumps should be of all bronze construction.

INSULATION BLANKETS

Insulation blankets are available to the general public for external use on electric water heaters but are not necessary with this product. The purpose of an insulation blanket is to reduce the standby heat loss encountered with storage tank heaters. Your water heater meets or exceeds the EPACT and ASHRAE/IES 90.1 standards with respect to insulation and standby loss requirements, making an insulation blanket unnecessary.

Should you choose to apply an insulation blanket to this heater, you should follow these instructions below. Failure to follow these instructions can result in fire, serious personal injury, or death.

- Do not cover the temperature and pressure relief (T & P) valve with an insulation blanket.
- Do not cover the instruction manual. Keep it on the side of the water heater or nearby for future reference.
- Do obtain new warning and instruction labels for placement on the blanket directly over the existing labels.

TEMPERATURE-PRESSURE RELIEF VALVE

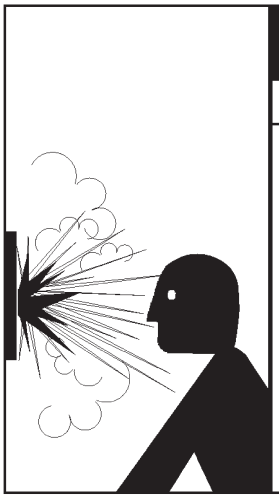

⚠ WARNING

Explosion Hazard

- Temperature-pressure relief valve must comply with ANSI Z21.22 and ASME code.
- Properly sized temperature-relief valve must be installed in opening provided.
- Failure to install relief valve can result in overheating and excessive tank pressure.
- Failure to follow these instructions can cause serious injury or death.

This water heater is provided with a properly rated/sized and certified combination temperature - pressure relief valve by the manufacturer. The valve is certified by a nationally recognized testing laboratory that maintains periodic inspection of production of listed equipment of materials as meeting the requirements for Relief Valves for Hot Water Supply Systems, ANSI Z21.22 • CSA 4.4, and the code requirements of ASME.

If replaced, the new valve must meet the requirements of local codes, but not less than a combination temperature and pressure relief valve rated/sized and certified as indicated in the above

paragraph. The new valve must be marked with a maximum set pressure not to exceed the marked hydrostatic working pressure of the water heater (150 psi = 1,035 kPa) and a discharge capacity not less than the water heater Btu/hr or KW input rate as shown on the water heater's model rating plate.

For safe operation of the water heater, the temperature and pressure relief valve must not be removed from its designated opening nor plugged. The temperature-pressure relief valve must be installed directly into the fitting of the water heater designed for the relief valve. Install discharge piping so that any discharge will exit only within 6 inches (15.2 cm) above, or at any distance below the structural floor. Be certain that no contact is made with any live electrical part. The discharge opening must not be blocked or reduced in size under any circumstances. Excessive length, over 30 feet (9.14 m), or use of more than four elbows can cause restriction and reduce the discharge capacity of the valve.

No valve or other obstruction is to be placed between the relief valve and the tank. Do not connect discharge piping directly to the drain unless a 6" (15.2 cm) air gap is provided. To prevent bodily injury, hazard to life, or property damage, the relief valve must be allowed to discharge water in adequate quantities should circumstances demand. If the discharge pipe is not connected to a drain or other suitable means, the water flow may cause property damage.

CAUTION

Water Damage Hazard

- Temperature-pressure relief valve discharge pipe must terminate at adequate drain.

The Discharge Pipe:

- Shall not be smaller in size than the outlet pipe size of the valve, or have any reducing couplings or other restrictions.
- Shall not be plugged or blocked.
- Shall be of material listed for hot water distribution.
- Shall be installed so as to allow complete drainage of both the temperature-pressure relief valve and the discharge pipe.
- Must terminate a maximum of six inches above a floor drain or external to the building. In cold climates, it is recommended that the discharge pipe be terminated at an adequate drain inside the building.
- Shall not have any valve or other obstruction between the relief valve and the drain.

⚠DANGER

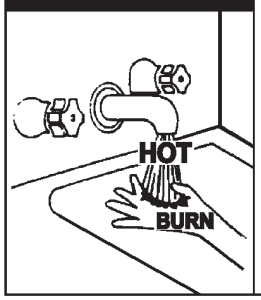

Water temperature over 125°F (52°C) can cause severe burns resulting in severe injury or death.

Children, the elderly, and the physically or mentally disabled are at highest risk for scald injury.

Feel water before bathing or showering.

Temperature limiting valves are available.

Read instruction manual for safe temperature setting.

The temperature-pressure relief valve must be manually operated at least once a year. Caution should be taken to ensure that (1) no one is in front of or around the outlet of the temperature-pressure relief valve discharge line, and (2) the water manually discharged can cause bodily injury or property damage because the water may be extremely hot. If after manually operating the valve, it fails to completely reset and continues to release water, immediately close the cold water inlet to the water heater, follow the draining instructions in this manual, and replace the temperature-pressure relief valve with a properly rated/sized new one.

If you do not understand these instructions or have any questions regarding the temperature-pressure relief valve call the toll free number listed on the back cover of this manual for technical assistance.

CLOSED WATER SYSTEMS

Water supply systems may, because of code requirements or such conditions as high line pressure, among others, have installed devices such as pressure reducing valves, check valves, and back flow preventers. Devices such as these cause the water system to be a closed system.

THERMAL EXPANSION

As water is heated, it expands (thermal expansion). In a closed system the volume of water will grow when it is heated. As the volume of water grows there will be a corresponding increase in water pressure due to thermal expansion. Thermal expansion can cause premature tank failure (leakage). This type of failure is not covered under the limited warranty. Thermal expansion can also cause intermittent temperature-pressure relief valve operation: water discharged from the valve due to excessive pressure build up. This condition is not covered under the limited warranty. The temperature-pressure relief valve is not intended for the constant relief of thermal expansion.

A properly sized thermal expansion tank should be installed on all closed systems to control the harmful effects of thermal expansion. Contact a local plumbing service agency to have a thermal expansion tank installed.

ELECTRICAL

⚠ WARNING

- **Before removing any access panels or servicing the water heater, make sure the electrical supply to the water heater is turned "OFF."**
- **Failure to do this could result in death, serious bodily injury, or property damage.**

GENERAL

The installation must conform with these instructions and the local code authority having jurisdiction and the requirements of the power company. In the absence of local codes, the installation must comply with the current editions of the National Electrical Code, NFPA 70 or the Canadian Electrical Code CSA C22.1.

An electrical ground is required to reduce risk of electrical shock or possible electrocution. The water heater should be connected to a separate grounded branch circuit with over-current protection and disconnect switch. The water heater should be grounded in accordance with national and local codes.

Voltage applied to the heater should not vary more than +5% to -10% of the model and rating plate marking for satisfactory operation.

DO NOT ENERGIZE THE BRANCH CIRCUIT FOR ANY REASON BEFORE THE HEATER TANK IS FILLED WITH WATER. DOING SO WILL CAUSE THE HEATING ELEMENTS TO BURN OUT AND VOID WARRANTY.

The factory wiring is attached to a terminal block within the external junction box unit. The branch circuit is connected to the terminal block within this junction box. The water heater should be connected to a separate, grounded, branch circuit with overcurrent protection and disconnect switch. The water heater should be grounded in accordance with national and local codes.

BRANCH CIRCUIT

The branch circuit wire size should be established through reference to the current edition of NFPA-70, the National Electrical Code or other locally approved source in conjunction with the heater amperage rating. For convenience, portions of the wire size tables from the Code are reproduced here. The branch circuit should be sized at 125 percent of the heater rating and further increase wire size as necessary to compensate for voltage drop in long runs.

CALCULATING AMPERAGE/OVERCURRENT PROTECTION

The heaters come from the factory in two configurations:

1. Two wire C-2 circuit for single element heater equipped with a high limit control, single phase power input.
2. Four wire A-8 circuit for dual element heater equipped with two high limit controls, single phase or three phase power input.

The heater with dual elements is factory wired for connection to a three wire, three-phase delta branch circuit, non-simultaneous operation. In addition a ground conductor is required.

Element connection is for non-simultaneous operation. This means only one element at a time operates. The wiring diagram, on page 12, shows the heater may be field converted to simultaneous element operation by moving the red wire on "J" terminal to L1. It is then possible for both elements to operate at once as determined by the thermostats. Regardless of element connection the heater operates in an "unbalanced" fashion.

The heater may be field converted to single-phase operation by moving the wire on L3 of the terminal block to L2. L3 is not used, see page 12.

The heater, now in single-phase non-simultaneous operation, may be field-converted to single phase simultaneous operation by moving the red wire on terminal "J" to L1, see page 12.

This is an example of calculating heater amperage for both types of element operation. From this, the branch circuit conductor and overcurrent protection sizing can be established.

The example is of a three-phase 240 volt unit with two, 6 kw elements. The notations are for units field converted to single-phase. Check the heater model and rating plate for actual specifications and substitute those values in the following.

TABLE 3

Non-simultaneous: (as factory wired)	Simultaneous: (Field conversion)
3000 : 240 = 12.5 amps*	3000 : 240 = 12.5 amps* 12.5 x 1.73 = 21.6 amps
*NOTE: as a single-phase non-simultaneous unit.	*NOTE: as a single-phase simultaneous unit the total is: 12.5 x 2 = 25 amps

The rating of the overcurrent protection should be computed on the basis of 125 percent of the total connected load amperage. Where the standard ratings and settings do not correspond with this computation, the next higher standard rating or setting should be selected.

Portion of Table 310-16 (NFPA-70) follows:
Allowable Ampacities of Insulated Copper Conductors. Not more than three conductors in Raceway or Cable or Direct Burial (Based on Ambient Temperature of 30° C, 86° F).

These ampacities relate only to conductors described in Table 310-13 in Code.

For ambient temperatures over 30° C (86° F), see Correction Factors, Note 13 in Code.

For ambient temperatures over 30° C (86° F), see Correction Factors, Note 13 in Code.

TABLE 4

Size	Temperature Rating of Conductor See Table 310-13 in Code	
AMG MCM	60°C (140°F)	75°C (167°F)
	Types: RUW, (14-2), T, TW, UF	Types: RH, RHW, RUH, (14-2), THW, THWN, XHHW, USE
18 16 14	- - - - - - 15	- - - - - - 15
12 10 8	20 30 40	20 30 45
6 4 3	55 70 80	65 85 100

Portion of Table 310-18 follows:
Allowable Ampacities of Insulated Aluminum and Copper -Clad Aluminum Conductors.

Not more than three conductors in Raceway or Cable or Direct Burial (Based on Ambient Temperature of 30° C, 86° F. These ampacities relate only to conductors described in Table 310-13 in Code.

For ambient temperatures over 30° C (86° F), see Correction Factors, Note 13 in Code.

TABLE 5

Size	Temperature Rating of Conductor See Table 310-13 in Code	
AMG MCM	60°C (140°F)	75°C (167°F)
	Types: RUW, (12-2), T, TW, UF	Types: RH, RHW, RUH, (12-2), THW, THWN, XHHW, USE
12 10	15 25	15 25
8 6	30 40	40 50
4 3	55 65	65 75
2 1	75 85	90 100

WIRING DIAGRAMS

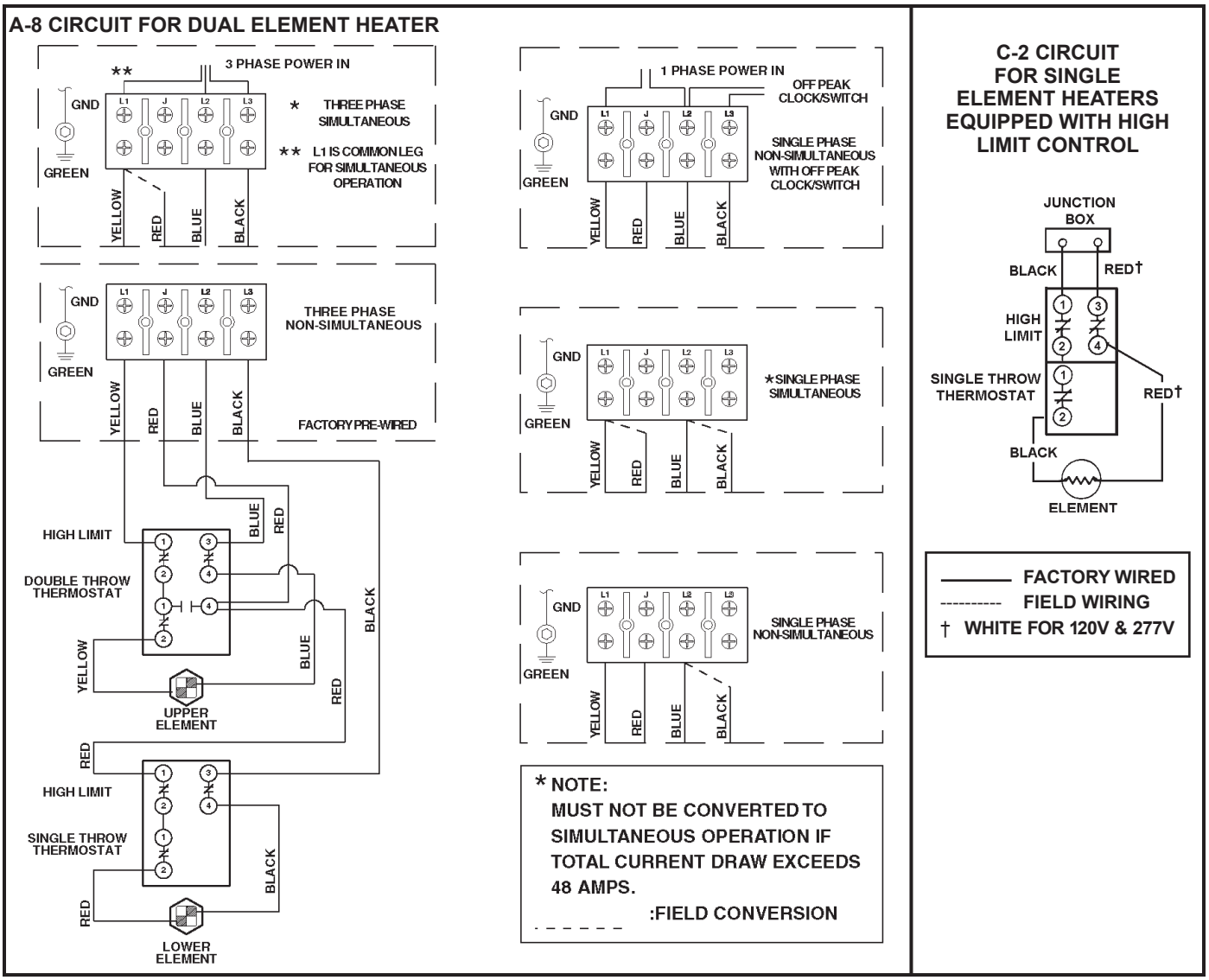

FIGURE 3

OPERATION

GENERAL

Refer to the Features and Components section of this manual (page 7) for the location of components mentioned in the instructions that follow.

NEVER turn on power to the water heater without being certain the water heater is filled with water and a temperature and pressure relief valve is installed in the relief valve opening.

DO NOT TEST ELECTRICAL SYSTEM BEFORE HEATER IS FILLED WITH WATER. FOLLOW FILLING AND START-UP INSTRUCTIONS IN OPERATION SECTION.

⚠DANGER

Full power is present whenever the cabinet door is opened even with the pilot switch turned off.

FILLING THE WATER HEATER

CAUTION

Property Damage Hazard

In order to avoid water heater damage, fill tank with water before operating.

1. Turn off the electrical disconnect switch.
2. Close the water heater drain valve.
3. Open a nearby hot water faucet to permit the air in the system to escape.
4. Fully open the cold water inlet pipe valve allowing the heater and piping to be filled.
5. Close the hot water faucet as water starts to flow. The heater is now ready for STARTUP and TEMPERATURE REGULATION.

INITIAL START UP

The following checks should be made by the installer when the heater is placed into operation for the first time.

1. Turn off the electrical disconnect switch.
2. Open the front panel or top access cover, check all water and electrical connections for tightness. Also check connections on top and or sides of heater. Repair water leaks and tighten electrical connections as necessary.
3. Depress the red manual reset button on each Thermostat/ECO combination control. (See Figure 5, Figure 6, Figure 7 or Figure 8)
4. Turn on the electrical disconnect switch.
5. Observe the operation of the electrical components during the first heating cycle. Use care as the electrical circuits are energized.
6. Close the front panel or top access cover.

Temperature control and contactor operation should be checked by allowing heater to come up to temperature and shut off automatically. Use care as the electrical circuits are energized.

DRAINING THE WATER HEATER

The water heater must be drained if it is to be shut down and exposed to freezing temperatures. Maintenance and service procedures may also require draining the heater.

1. Turn off the electrical disconnect switch.
2. Open a hot water valve until the water is cool, then close the supply water inlet valve to heater.
3. Attach hose to outlet opening of drain valve and direct end to drain.
4. Open a nearby hot water faucet and the heater drain valve.
5. If the heater is being drained for an extended shutdown, it is suggested the drain valve be left open during this period. The hose may be removed.

Follow FILLING instructions when restoring hot water service.

⚠DANGER

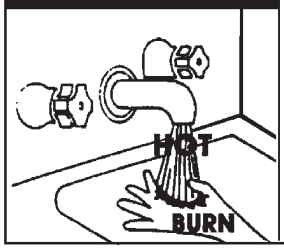

- Burn hazard
- Hot water discharge.
- Keep clear of drain valve outlet.

TEMPERATURE REGULATION

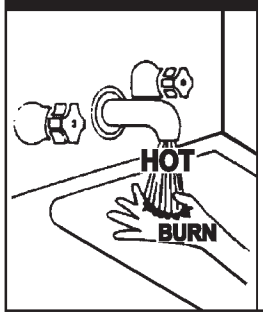

⚠ DANGER

Water temperature over 125°F (52°C) can cause severe burns resulting in severe injury or death.

Children, the elderly, and the physically or mentally disabled are at highest risk for scald injury.

Feel water before bathing or showering.

Temperature limiting valves are available.

Read instruction manual for safe temperature setting.

THE WATER HEATER IS EQUIPPED WITH AN ADJUSTABLE THERMOSTAT TO CONTROL WATER TEMPERATURE. HOT WATER AT TEMPERATURES DESIRED FOR AUTOMATIC DISHWASHER AND LAUNDRY USE CAN CAUSE SCALDS RESULTING IN SERIOUS PERSONAL INJURY AND/OR DEATH. THE TEMPERATURE AT WHICH INJURY OCCURS VARIES WITH THE PERSON'S AGE AND TIME OF EXPOSURE. THE SLOWER RESPONSE TIME OF CHILDREN , AGED OR DISABLED PERSONS INCREASES THE HAZARD TO THEM. NEVER ALLOW SMALL CHILDREN TO USE A HOT WATER TAP, OR TO DRAW THEIR OWN BATH WATER. NEVER LEAVE A CHILD OR DISABLED PERSON UNATTENDED IN A BATHTUB OR SHOWER.

It is recommended that lower water temperatures be used to avoid the risk of scalding. It is further recommended, in all cases, that the water temperature thermostats (See Figure 4) be set for the lowest temperature which satisfies your hot water needs. This will also provide the most energy efficient operation of the water heater.

Figure 4 shows the approximate time-to-burn relationship for normal adult skin. The thermostats on your water heater have a linear relationship between degrees of angular rotation and the corresponding change in temperature. Thus rotating the temperature adjustment indicator 30 angular degrees will result in a 10 degree Fahrenheit change in water temperature.

Water Temperature °F (°C)	Time for 1st Degree Burn (Less Severe Burns)	Time for Permanent Burns 2nd & 3rd Degree (Most Severe Burns)
110 (43)	(normal shower temp.)	
116 (47)	(pain threshold)	
116 (47)	35 minutes	45 minutes
122 (50)	1 minute	5 minutes
131 (55)	5 seconds	25 seconds
140 (60)	2 seconds	5 seconds
149 (65)	1 second	2 seconds
154 (68)	instantaneous	1 second
(U.S. Government Memorandum, C.P.S.C., Peter L. Armstrong, Sept. 15, 1978)		

FIGURE 4

TEMPERATURE ADJUSTMENT

The water heater is supplied with thermostats that may come from different manufactures and have different temperature indications as described below.

APCOM THERMOSTATS

A-8 Circuit thermostats have three designated set points; LO, MED and HI. (See Figure 5).The approximate equivalent temperatures for these three settings are: LO = 140°F (60°C), MED = 160°F (71°C) and HI = 180°F (82°C). These thermostats are set from the factory at the LO 140°F (60°C) setting. The over temperature device (ECO high limit) attached to each thermostat has a manual reset. The C-2 circuit thermostat is adjustable from approximately 130°F (54°C) to 170°F (77°C) (See Figure 6). These thermostats are set from the factory at approximately the 140°F (60°C) setting. The over temperature device (ECO high limit) attached to each thermostat has a manual reset.

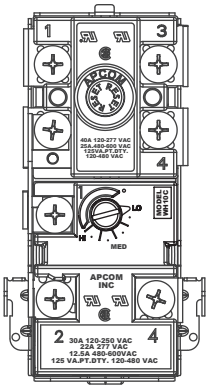

FIGURE 5

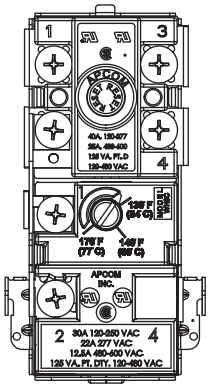

FIGURE 6

THERMODISC THERMOSTATS

A-8 circuit thermostats are adjustable from approximately 120°F (49°C) (lowest setting) to 180°F (82°C) (highest setting) (See Figure 7). The C-2 circuit thermostat is adjustable from approximately 110°F (43°C) to 170°F (77°C) (See Figure 8). These thermostats are set from the factory at approximately the 140°F (60°C) setting. The over temperature device (ECO high limit) attached to each thermostat has a manual reset.

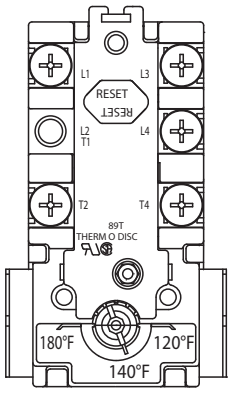

FIGURE 7

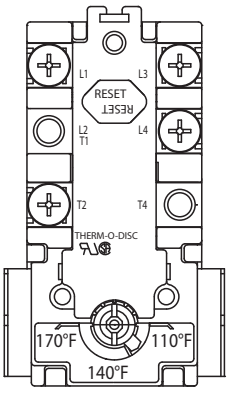

FIGURE 8

NOTE: It is not necessary to adjust the upper thermostat for a dual element unit. However, if it is adjusted above the factory set point 140°F (60°C) it is recommended that it not be set higher than the lower thermostat setting.

To change the temperature setting:

1. DANGER: Turn off the heater electrical supply. Do not attempt to adjust thermostat with power on.
2. Open the junction box door (for upper thermostat of dual element water heater only) and/or remove the (lower) thermostat access panel. Do not remove the plastic personnel protectors covering the thermostats. The thermostat is factory pre-set at 140°F (60°C).
3. Using a flat tip screwdriver, rotate the adjusting knob to the desired temperature setting.
4. Replace the covers and access panels, and turn on heater electrical supply.

MAINTENANCE

GENERAL

⚠DANGER

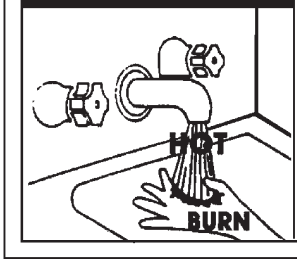

- Burn hazard
- Hot water discharge.
- Keep clear of relief valve discharge outlet.

Periodically the drain valve should be opened and the water allowed to run until it flows clean. This will help to prevent sediment buildup in the tank bottom.

Periodically check the temperature and pressure relief valve to ensure that it is in operating condition. Lift the lever at the top of the valve several times until the valve seats properly and operates freely.

Water heater maintenance includes periodic tank flushing and cleaning, and removal of lime scale from the heating element.

The heater tank is equipped with an anode rod to aid in corrosion control.

ANODE ROD INSPECTION

CAUTION

Property Damage Hazard

- Avoid water heater damage.
- Inspection and replacement of anode rod required.

The anode rod is used to protect the tank from corrosion. Most hot water tanks are equipped with an anode rod. The submerged rod sacrifices itself to protect the tank. Instead of corroding tank, water ions attack and eat away the anode rod. This does not affect water's taste or color. The rod must be maintained to keep tank in operating condition.

Anode deterioration depends on water conductivity, not necessarily water condition. A corroded or pitted anode rod indicates high water conductivity and should be checked and/or replaced more often than an anode rod that appears to be intact. Replacement of a depleted anode rod can extend the life of your water heater. Inspection should be conducted by a qualified technician, and at a minimum should be checked annually after the warranty period.

Artificially softened water is exceedingly corrosive because the process substitutes sodium ions for magnesium and calcium ions.

The use of a water softener may decrease the life of the water heater tank.

The anode rod should be inspected after a maximum of three years and annually thereafter until the condition of the anode rod dictates its replacement. The anode rod is not covered by the limited warranty.

NOTE: Artificially softened water requires the anode rod to be inspected annually.

TROUBLESHOOTING CHECKLIST

CHECKLIST

Before calling for service, check the following points to see if the cause of trouble can be identified and corrected.

Reviewing this checklist may eliminate the need of a service call and quickly restore hot water service. See Figure 2 on page 7 in this manual to identify and locate water heater components.

⚠ WARNING

- **Before removing any access panels or servicing the water heater, make sure the electrical supply to the water heater is turned "OFF."**
- **Failure to do this could result in death, serious bodily injury, or property damage.**

NOT ENOUGH OR NO HOT WATER

1. Be certain the electrical disconnect switch serving the water heater is in the ON position.
2. Check the fuses.
   - The electrical disconnect switch usually contains fuses.
3. If the water was excessively hot, and is now cold, the high limit switch may have activated.
   - See the Temperature Regulation section of this manual for more information on how to reset the ECO high limit controls.
4. The capacity of the heater may have been exceeded by a large demand for hot water.
   - Large demands require a recovery period to restore water temperature.
5. Cooler incoming water temperature will lengthen the time required to heat water to the desired temperature.
6. Look for hot water leakage.
7. Sediment or pipe scale may be affecting water heater operation.

ABNORMAL SOUNDS

1. Sediment or lime scale accumulations on the elements causes sizzling and hissing noises when the heater is operating.
   - The sounds are normal, however, the tank bottom and elements should be cleaned. See the Maintenance section of this manual.

WATER LEAKAGE IS SUSPECTED

Refer to Leakage Checkpoint on the following page 17.

1. Check to see if the heater drain valve is tightly closed.
2. If the outlet of the relief valve is leaking it may represent:
   - Excessive water temperature.
   - Faulty relief valve.
   - Excessive water pressure.
3. Excessive water pressure is the most common cause of relief valve leakage. It is often caused by a "closed system". See "Closed Water Systems" and "Thermal Expansion" in the Installation section of this manual for more information.
4. Examine the area around the element for gasket leakage.
   - Tighten the elements or, if necessary, replace the gaskets.

IF YOU CANNOT IDENTIFY OR CORRECT THE SOURCE OF MALFUNCTION

1. Turn the power supply to the water heater off.
2. Close the supply water inlet valve to the heater.
3. Contact a Qualified Service Agency in your area. Call the toll free phone number on the back cover of this Instruction Manual for assistance in locating a service agency in your area.

REPLACEMENT PARTS

Call the toll free phone number on the back cover of this Instruction Manual for assistance in locating replacement parts.. When ordering parts, specify complete model no., serial no., (see rating plate), quantity and name of part desired. Standard hardware items should be purchased locally.

LEAKAGE CHECKPOINTS

Instructions: Use this illustration as a guide when checking for sources of water leakage. You or your dealer may be able to correct what appears to be a problem. **NOTE: Cover and Insulation shown removed to reveal tank top.**

Where possible remove or lift top cover to examine threads of fittings installed into tank for evidence of leakage. Correct fitting leaks as necessary.

Water leaks at the elements may be due to:

1. **Defective element which leaks at terminals or thru flange. Replace element*.**
2. **Loose element/gasket leak:**
   - **(a) Screw-in type: tighten with 1-1/2" socket wrench. If leak continues, remove element*, discard gasket and clean thread areas.Apply nonhardening Permatex Number 2 to thread areas, install new gasket and screw element into fitting until it seats. Tighten 1/2 to 3/4 turn with wrench.**
   - **(b) Flange type: tighten screw with wrench. If leak continues remove element* and discard gasket. Clean gasket seating areas and re-install element with new gasket. A new element may be required where threads have become rusted or damaged, preventing tightening.**

All water which appears at the water heater bottom or on the surrounding floor may be caused by condensation, loose connections or relief valve operation and leakage. Do not replace the water heater until full inspection of all potential leak points is made and corrective steps taken to stop the leak. Leakage from other appliances, water lines or ground (see page 16) should also be suspected until proven otherwise.

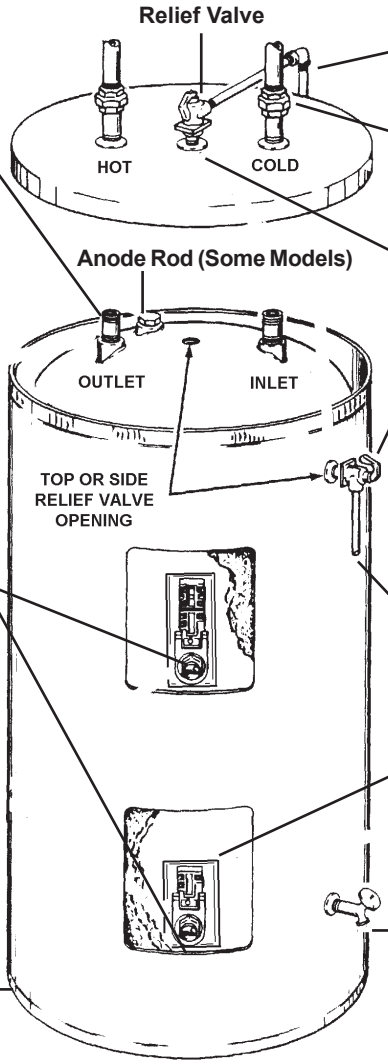

To Open Drain

Condensation and dripping may appear on pipes when cold water temperature is low. Pipe fitting may be leaking.

Relief valve operation and leakage may be due to water expansion during heating cycle or foreign material on seat of valve. If the valve is not piped to an open drain the released water could be mistaken for a leaking heater. To check where threaded material between jacket opening and swab spud area. Remove valve* if indicated and repair with pipe joint compound.

To Open Drain

Water on the side of the tank may be condensation due to the panel or insulation not being in place.

Drain valve leakage could be from the valve itself.* To check for leakage where threaded portion enters tank, insert Q-tip or similar absorbent material between jacket opening and valve to swab spud area. Remove valve* if leak is indicated and repair with pipe joint compound.

*Contact your dealer as it is necessary to shut off electricity and drain tank to perform procedure.

FIGURE 9

NOTES

NOTES

REPAIR PARTS LIST

Now that you have purchased this water heater, should a need ever exist for repair parts or service, simply contact the company it was purchased from or direct from the manufacturer listed on the rating plate on the water heater.

Selling prices will be furnished on request or parts will be shipped at prevailing prices and you will be billed accordingly.

The model number of your Water Heater will be found on the rating plated located above the lower access panel.

Be sure to provide all pertinent facts when you call or visit.

WHEN ORDERING REPAIR PARTS, ALWAYS GIVE THE FOLLOWING INFORMATION:

- MODEL NUMBER
- VOLTAGE AND ELEMENT WATTAGE
- SERIAL NUMBER
- PART DESCRIPTION

PCE 6/10/17/20 (refer to repair parts table).

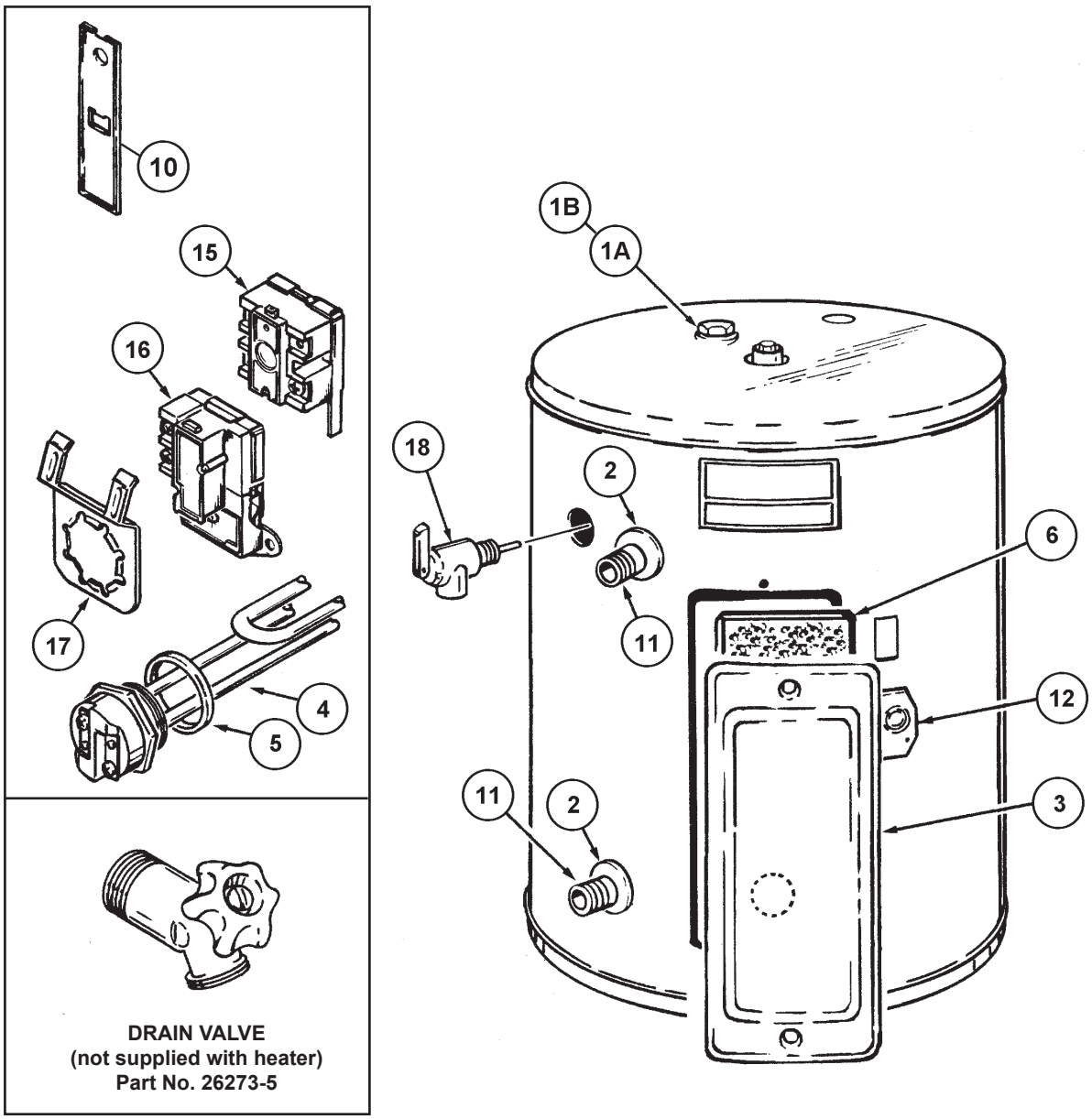

FIGURE 10

Item	Description	PCE-61OSMA Series 102	PCE-101OSMA Series 102	PCE-171OSMA Series 102	PCE-201OSMA Series 102
1A	Anode, Alum...	9003942005	9003942005	9003942005	9003944005
1B	Anode, Mag. (SMR P72 and S19)	9001909005	9001909005	9001909005	9003721005
2	Collar, Pipe	9004610115	9004610115	9004610115	9004610115
3	Cover, Front	9003900005	9003900005	9003900005	9003900005
4	ELEMENT, HEATING	SEE ELEMENT CHART ON PAGE 23			
5	Gasket, Element	9000308005	9000308005	9000308005	9000308005
6	Opening Insulation	043307-000	043307-000	043307-000	043307-000
7	*Instruction Manual	195202-004	195202-004	195202-004	195202-004
10	Personnel Protector	9003914015	9003914015	9003914015	9003914015
11	Pipe Nipple	194130	194130-3	194130-3	194130-3
12	Plate, Knockout	43293-1	43293-1	43293-1	43293-1
	PLUG				
15/16	Thermostat with High Limit Switch	9006586015	9006586015	9006586015	9006586015
17	Bracket, Thermostat	9003898015	9003898015	9003898015	9003898015
18	Valve, Relief	9003484005	9003741005	9003741005	9003741005

*Not Illustrated.
Standard Hardware Items May Be Purchased Locally. Underlined Parts Are Recommended For Emergency Replacement.

PCE 30 2ORTA thru PCE 120 2ORTA
(Refer to Repair Parts Table on page 22)

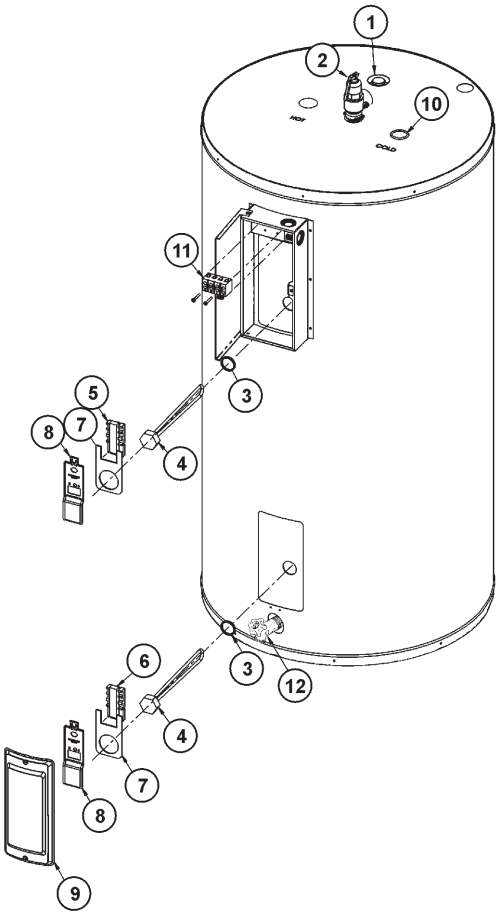

FIGURE 11

PCE 30 2OLSA thru PCE 50 2OLSA
(Refer to Repair Parts Table on page 22)

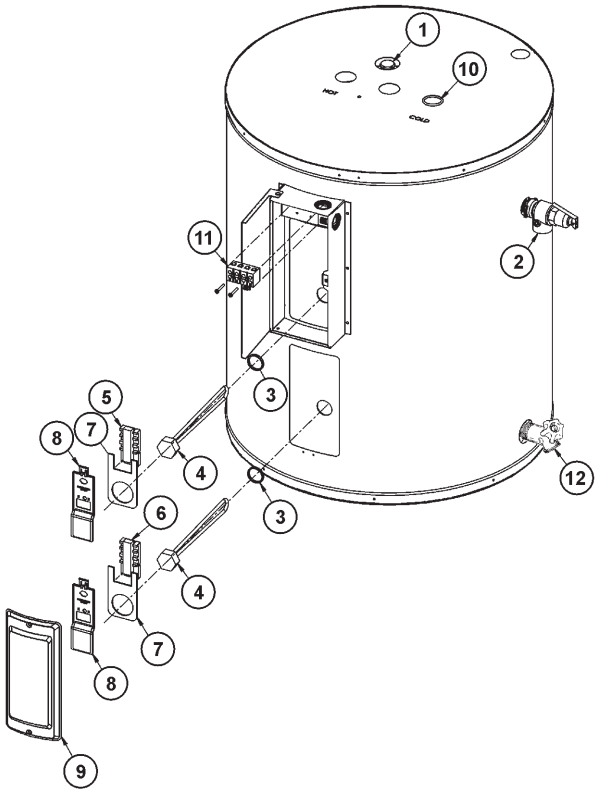

FIGURE 12

Item	Description	PCE 30 2OLSA Series 110	PCE 40 2OLSA Series 110	PCE 50 2OLSA Series 110	PCE 30 2ORTA Series 110	PCE 40 2ORTA Series 110	PCE 52 2ORTA Series 110	PCE 66 2ORTA Series 110	PCE 52 2ORTA Series 110	PCE 120 2ORTA Series 110
1A	Anode, Alum.	9003944005	9003944005	9003944005	9003944005	9003944005	9003944005	9000029005	9003892005	9003892005
1B	Anode, Mag.(SMR P72)	9003721005	9003721005	9003721005	9003721005	9003721005	9003721005	9003721005	9001829005	9001829005
2	T&P Relief Valve	9003741005	9003741005	9003741005	9000071005	9000071005	9000071005	9000071005	9000071005	9000071005
3	Gasket, Element	9000308045	9000308045	9000308045	9000308045	9000308045	9000308045	9000308045	9000308045	9000308045
4	ELEMENT, each	(SEE ELEMENT & WATTAGE CHART page 23)								
5	Upper Thermostat w/Hi Limit	9002856015	9002856015	9002856015	9002856015	9002856015	9002856015	9002856015	9002856015	9002856015
6	Lower Thermostat w/Hi Limit	9002857015	9002857015	9002857015	9002857015	9002857015	9002857015	9002857015	9002857015	9002857015
7	Thermostat Bracket, each	9003898215	9003898215	9003898215	9003898215	9003898215	9003898215	9003898215	9003898215	9003898215
8	Personal Protector	9003914015	9003914015	9003914015	9003914015	9003914015	9003914015	9003914015	9003914015	9003914015
9	Lower Access Panel	9003900005	9003900005	9003900005	9003900005	9003900005	9003900005	9003900005	9003900005	9003900005
10	Dip Tube	9003902005	9003902005	9003902005	9003902005	9003903005	9003904005	9003905005	9003905005	9005709205
11	Power Terminal	9005719215	9005719215	9005719215	9005719215	9005719215	9005719215	9005719215	9005719215	9005719215
12	Drain Valve	9003906015	9003906015	9003906015	9003906015	9003906015	9003906015	9003906015	9003906015	9003906015
15*	Junction Box Assembly	195171	195171	195171	195171	195171	195171	195171	195171	195171

*Not Illustrated.

Standard Hardware Items May Be Purchased Locally.

Underlined Parts Are Recommended For Emergency Replacement.

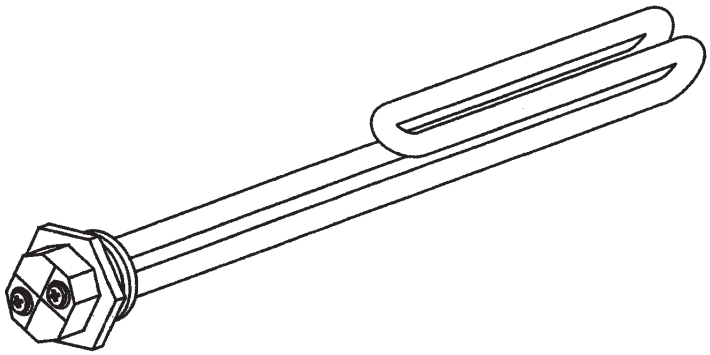

FIGURE 13

TABLE 6 - COPPER SHEATH ELEMENT AND WATTAGE CHART

K.W.	ELEMENT WATTAGE	120V	208V	240V	277V	480V
		PART NO.	PART NO.	PART NO.	PART NO.	PART NO.
1.0	1000W	- - -	9002863115	90001431005	- - -	- - -
1.5	1500W	9002963005	9000145005	9002864005	9001225115	- - -
2.0	2000W	9003947005	9002858005	9000145005	9004709115	- - -
2.5	2500W	9002859005	9004712105	9002860005	9002890005	9002861005
3.0	3000W	9002862005	9002868005	9003959005	9003958005	9003961005
3.5	3500W	- - -	9003950005	9004712105	- - -	- - -
MAX 3.5KW INPUT FOR 6 GALLON UNITS, ELEMENTS BELOW DOTTED LINE CANNOT BE USED ON 6 GALLON UNITS						
4.0	4000W	- - -	9002867005	9002868005	9001229005	9002869005
4.5	4500W	- - -	9003952005	9003950100	9003960005	9001225005
5.0	5000W	- - -	9001224005	9003957005	9001231005	9001236005
5.5	5500W	- - -	9002871005	9002867005	- - -	9002872005
6.0	6000W	- - -	9003953005	9003952005	9002874005	9002875005

TABLE 7 - INCOLOY SHEATH ELEMENT AND WATTAGE CHART (FOR SMR P72)

K.W.	ELEMENT WATTAGE	120 V	208 V	240 V	277 V	480 V
		PART NO.	PART NO.	PART NO.	PART NO.	PART NO.
1.5	1500 W	9004279005	9004283005	9004290005	9004736105	Not Available
2.0	2000 W	9004280005	9004284005	9004283005	9004290005	9004298005
2.5	2500 W	9004281005	9004285005	9004291005	9004295005	9004299005
INCOLOY ELEMENTS BELOW THIS LINE CANNOT BE USED ON 6 GALLON UNITS BECAUSE OF ELEMENT LENGTH						
3.0	3000 W	9004282005	9004751115	9000664005	9004296005	9004300005
3.5	3500 W	Not Available	9003210005	9004292005	Not Available	Not Available
4.0	4000 W	Not Available	9004294005	9004751115	9000664005	Not Available
4.5	4500 W	Not Available	9004287005	9003210005	9004297005	9004301005
5.0	5000 W	Not Available	9004753105	9004293005	Not Available	Not Available
5.5	5500 W	Not Available	9004288005	9004294005	Not Available	Not Available
6.0	6000 W	Not Available	9004289005	9004287005	Not Available	Not Available

www.statewaterheaters.com
500 Tennessee Waltz Parkway, Ashland City, TN 37015
Tech Support: 800-365-0024
Parts: 800-821-2017

Copyright © 2012 State Water Heaters, All rights reserved.